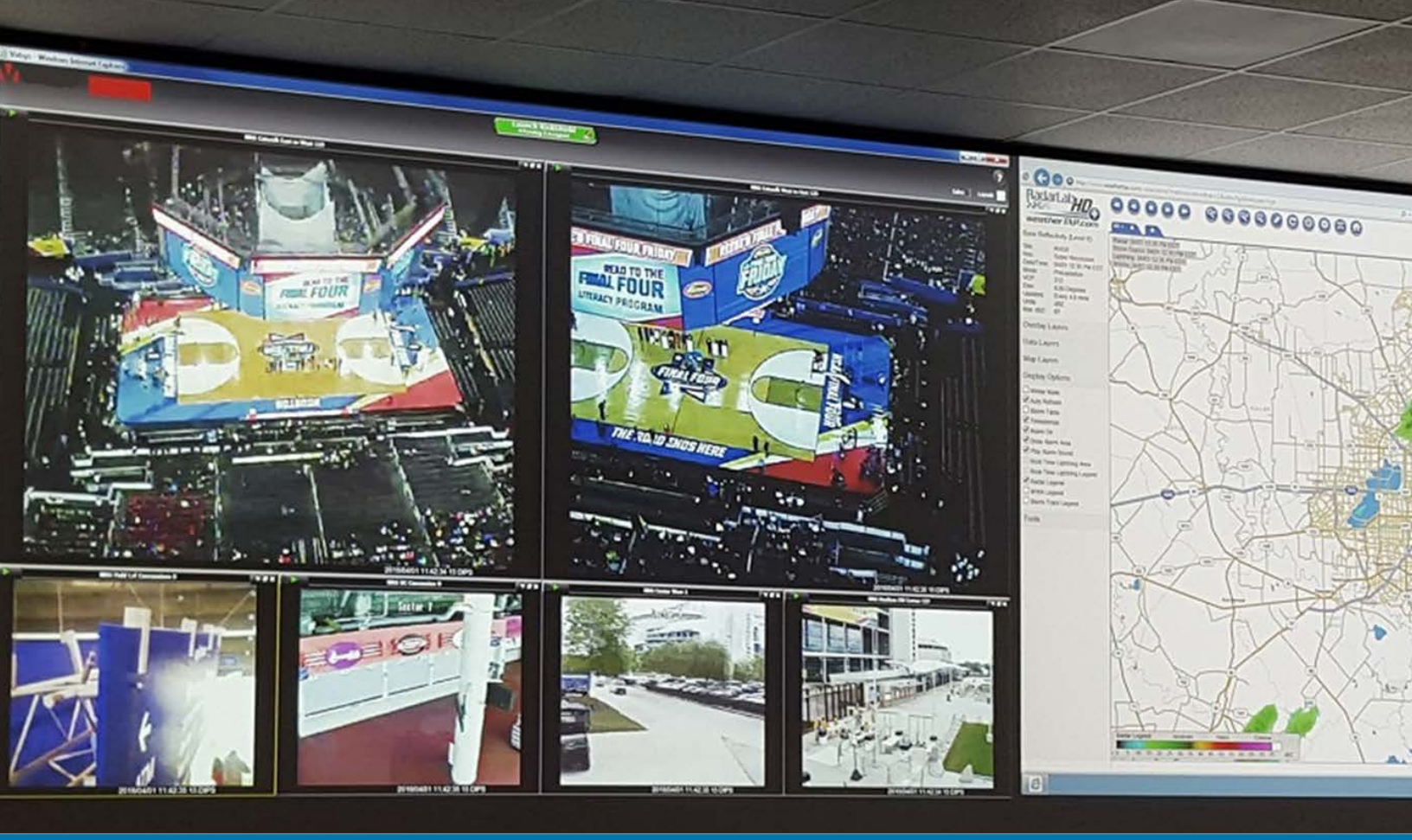

Datacasting:

NCAA Deployment in Houston Report

First Responders Group

July 2016

Homeland Security

Science and Technology

Intentionally Blank

Datacasting:

NCAA Deployment in Houston Report

HSHQPM-15-X-00122
August 2016

Prepared for:	**The First Responders Group Office for Interoperability and Compatibility**
Prepared by:	**Johns Hopkins University Applied Physics Lab**

Homeland Security
Science and Technology

Publication Notice

Disclaimer

The views and opinions of authors expressed herein do not necessarily reflect those of the U.S. government.

Reference herein to any specific commercial products, processes, or services by trade name, trademark, manufacturer, or otherwise does not necessarily constitute or imply its endorsement, recommendation, or favoring by the U.S. government.

The information and statements contained herein shall not be used for the purposes of advertising, nor to imply the endorsement or recommendation of the U.S. government.

With respect to documentation contained herein, neither the U.S. government nor any of its employees make any warranty, express or implied, including but not limited to the warranties of merchantability and fitness for a particular purpose. Further, neither the U.S. government nor any of its employees assume any legal liability or responsibility for the accuracy, completeness, or usefulness of any information, apparatus, product, or process disclosed; nor do they represent that its use would not infringe privately owned rights.

Contact Information

Please send comments or questions to: SandTFRG@HQ.DHS.GOV

Intentionally Blank

Contents

1 Introduction 1-3
2 Houston Datacasting NCAA Championship Event Deployment 2-5
3 Proposed Enhancements 3-12
4 Summary and Conclusions 4-14
5 References 5-16

Figures

Figure 1: SpectraRep representative demonstrating datacasting cellular upload capability 2-7
Figure 2: Datacasting capability being installed on HFD cellular phones to support the streaming of video data from the field 2-8
Figure 3: Datacasting Control Center Workstation in the City of Houston EOC 2-10
Figure 4: Supplemental Datacasting viewing monitor (also pictured above) in the City of Houston EOC 2-10
Figure 5: Datacasting dashboard as displayed on the City of Houston EOC situational awareness wall 2-11
Figure 6: Datacasting dashboard as displayed on the City of Houston EOC situational awareness wall. Video from HPD cell phone displayed on monitor wall in Houston EOC before being rebroadcast via datacasting. 2-11
Figure 7: HFD Observing Datacasting System 3-13
Figure 8: HFD Command Vehicle 3-14

Intentionally Blank

Executive Summary

The Johns Hopkins University Applied Physics Laboratory (JHU/APL), under the direction of the Department of Homeland Security (DHS) Science and Technology Directorate (S&T), First Responders Group (FRG), Office for Interoperability and Compatibility (OIC), supported deployment of a prototype datacasting system installed at the City of Houston Emergency Operations Center (EOC) during the NCAA Final Four National Championship Games in April 2016. Datacasting is a technology that leverages available bandwidth in digital television signals to provide secure, targeted broadcasts of data, including voice, text, files, images, and video. During the deployment, the datacasting system was used to broadcast relevant video and other data to public safety officers. Content transmitted via datacasting included files, notifications and multiple live video streams, including live video via cellular LTE from remote law enforcement, fire department and other users in the field. During February 2016 testing of the datacasting system, City of Houston officials identified smart phone video transmitted to the datacasting dashboard as an additional useful capability. Thus, the subcontractor SpectraRep expanded this capability for the Final Four tournament. SpectraRep provided technical support to Houston Public Safety officers prior to and during the event, while the JHU/APL team used the event as an opportunity to directly observe the system in operational use and further conduct an on-going assessment of its operational utility.

As noted in the "Video Datacasting: Houston Pilot After Action Report" HSHQPM-15-X-00122 October 2015 (1), datacasting leverages available capacity in existing digital television signals to provide secure, targeted broadcasts of data, including voice, text, files, images and video. Data is encoded, encrypted, registered (for access control) and multiplexed with other streams into the digital television signal. Relatively inexpensive datacasting receivers are used to receive the signal, and SpectraRep's Incident One software enables targeted recipients to view the encrypted data. Existing digital TV transmission infrastructure (i.e., power, licensed spectrum, radio frequency transmission equipment, antenna, tower) is used, so datacasting does not add a significant cost to the broadcaster. Using television station infrastructure, which already employs redundant systems, hardened infrastructure and professional engineering support, makes datacasting highly reliable, especially during emergencies.

The April 1-4, 2016, datacasting deployment in Houston provided an opportunity to extend the datacasting capability to more participants, allow those participants to receive equipment and sufficient training to operate the system, demonstrate the technical capabilities of datacasting (coverage, video quality, ease of use) and its applicability to a number of day-to-day public safety challenges. Additionally, the observation of the deployment aimed at identifying additional capabilities/requirements for future datacasting development efforts. This deployment closely follows a previous deployment and test of the system in Houston as described in the U.S. Department of Homeland Security's Video Datacasting: Houston Pilot After Action Report HSHQPM-15-X-00122 October 2015.

Participants in the NCAA event coverage were able to use the system effectively with very little hands-on training. They cited the ability to upload or stream real-time video from a smartphone, a capability that enables officers in the field to backhaul data to the

datacasting system for wider dissemination, as a feature capable of particularly enhancing situational awareness. This April deployment provided further validation of the capability and utility of datacasting for public safety and law enforcement, and expanded the scope of its use in the city of Houston. JHU/APL will continue to collect data and perform additional analysis to better define the potential uses of this capability and how it may be integrated within the broader public safety telecommunications architecture.

1 Introduction

The U.S. Department of Homeland Security (DHS) is committed to using cutting-edge technologies and scientific talent in its efforts to make America safer. The DHS Science and Technology Directorate (S&T) is tasked with researching and organizing the scientific, engineering and technological resources of the United States and leveraging these existing resources into technological tools to help protect the nation. The DHS S&T First Responders Group / Office for Interoperability and Compatibility administers a program entitled *"Video Quality in Public Safety"* (VQiPS) that is concerned with all facets of the use of video in the public safety field (i.e., law enforcement, fire, emergency medical technicians and associated entities). The VQiPS Vision, Mission and Goals are as follows:

VQiPS Vision

The VQiPS Working Group will create a collaborative environment that accelerates the ability of users to specify and deploy video technology solutions that meet user requirements and improve public safety and homeland security enterprise operations.

VQiPS Mission

The VQiPS Working Group creates knowledge products, fosters a knowledge-sharing environment, and supports research, development, testing and evaluation for enhanced video quality through measurable, objective and standards-based solutions across the full spectrum of video-use cases for the public safety community.

VQiPS Background and Goals

The VQiPS initiative, which started in 2008, is a multi-stakeholder partnership between the DHS S&T Directorate, the U.S. Department of Commerce's Public Safety Communications Research Program (PSCR), public safety practitioners, the private sector, standards development organizations and the global research community. VQiPS gathers input from practitioners and video experts and delivers unbiased guidance and educational resources that help the first responder community clearly define and communicate its video quality needs. In the beginning, the group sought to accomplish two tasks: educate end users about video system components and provide knowledge tools to help end users define their own use case requirements. VQiPS accomplished these goals with multiple technical reports and the development of the VQiPS Web Tool: http://www.pscr.gov/outreach/video/vqips/vqips_guide/ and the Video Quality Standards Handbook: https://www.dhs.gov/publication/vqips-handbook.

Moving forward, VQiPS will support the build-out of the Nationwide Public Safety Broadband Network (NPSBN) by developing video-over-broadband materials and guides, as well as connection to FirstNet to provide technical information and feedback regarding video over LTE.

Identifying and supporting best practices in the efficient distribution of video is consistent with the VQiPS program goals.

1.1 Datacasting Capabilities

As previously discussed in the "Video Datacasting: Houston Pilot After Action Report" [1], because it uses television station infrastructure, datacasting is highly reliable, especially during emergencies. For example, during the 2013 Boston Marathon, cellular and landline communications were saturated and largely unavailable for at least 90 minutes after the bombing [1]. Following the 2011 Mineral Virginia Earthquake, cell and landline communications were saturated for the first 30 minutes [2]. During 2005 Hurricane Katrina [3] and 2012 Superstorm Sandy [4], cellular and Internet communications were severely affected for an extended time. It should be noted that during Hurricane Katrina, only about 28 percent of TV stations experienced downtime in the storm zone [5]. Television station downtime could result from damaged transmission towers, flooded transmission equipment or the loss of power for prolonged periods that exceeded back-up generator capabilities. Therefore, as long as the TV station has a source of power with an intact transmission tower and equipment, datacasting should be a reliable means of communicating emergency information to first responders.

Datacasting has the potential to provide significant benefit to first responders, including law enforcement. Potential benefits include the following:

- Because broadcast TV signals are widely available in urban, suburban and rural environments, datacasting coverage typically exceeds that of cellular systems and land mobile radio. TV broadcasts not only can reach remote areas, but also urban "dead spots" not covered by existing public safety telecommunications systems.

- Because datacasting uses the infrastructure provided by a broadcast TV station, it is a highly reliable and available method of telecommunication. In contrast, cellular coverage is often lost for significant periods of time following emergency events.

- Datacasting is not subject to congestion during emergencies. Unlike other public safety telecommunications systems, datacasting does not share infrastructure or capacity with commercial communication networks accessible by the general public.

- Datacasting can be used to multicast data to a large number of users for the same cost as the transmission of data to a single user. Datacasting can make more efficient use of available bandwidth and possibly reduce the cost of commercial service to the agency by reducing the overall demand for bandwidth.

- Datacasting is relatively inexpensive to implement and operate. Many public broadcasting TV stations are already configured to support datacasting. The existing digital TV transmission infrastructure (i.e., power, radio frequency equipment, antenna, tower) is used, so datacasting does not add a significant cost to the broadcaster.

Datacasting has been used by the Clark County School District Police Department in Las Vegas, Nevada, (see: http://www.spectrarep.com/pr05132010.html) to broadcast video from their extensive closed circuit video (CCTV) system via the Nevada Public Television Station

KLVX. As implemented in Clark County, datacasting is a reliable and useful system that provides operators with ready access to critical data, ensures the timeliness of that data and enables dependable transmission of that data across the entire county – something local cellular networks and land mobile radio (LMR) cannot achieve. In the event of a major event at a school anywhere in Clark County, first responders would have access to critical and current information. In addition, datacasting provides a powerful emergency broadcasting capability that can be leveraged in case of a crisis. Given the growing interest in datacasting as a distribution method for video, it is the desire of the VQiPS program to further investigate and study the viability of this technology and potential application, especially in light of the National Public Safety Broadband Network.

Additional details on the capabilities provided by datacasting can be found in Appendix A: Datacasting Capabilities – Expanded, while technical details of the datacasting system are provided in Appendix B.

1.2 Goal of this report

The main goal of this report is to provide a summary of activities and events associated with the April 2016 datacasting system's deployment and use in support of events associated with the NCAA championship basketball games at NRG Park. This deployment involved several agencies, including the City of Houston Police Department (HPD), NRG Park, the Harris County Sheriff's Department and Houston Fire Department (HFD).

2 Houston Datacasting NCAA Championship Event Deployment

2.1 NCAA Event Schedule and Overview

The City of Houston EOC was activated and participated along with HPD, HFD, Harris County Sheriff's Office and others in the security and monitoring of events associated with the NCAA 2016 Final Four/National Championship Events. These agencies had responsibility for security and safety at the basketball games and at the numerous related events, including large open parties and free concerts, staged at NRG stadium and other sites in Houston between April 1-4, 2016. Because these events were open to the general public and did not require tickets, many of them were heavily attended, some exceeded capacity, and gates were closed to prevent overcrowding. These events included the following:

Friday, April 1:

Fan Fest Events

Tip-Off Tailgate (11 a.m. – 5 p.m.)

Location – NRG Stadium

Fan Fest (12 p.m. – 8 p.m.)

Location – NRG Stadium/George R. Brown Convention Center

AT&T Block Party (4 p.m. – 10 p.m.)

Location: Main Stage and Taste of Houston Stage

<u>Saturday, April 2:</u>

Fan Fest Events

Tip-Off Tailgate (1:30 p.m. – 4:30 p.m.)

Location – NRG Stadium

Fan Fest (9 a.m. – 7 p.m.)

Location – NRG Stadium/George R. Brown Convention Center

NCAA Basketball Games

No. 2 Oklahoma vs. No. 2 Villanova, 6:09 p.m.
No. 1 North Carolina vs. No. 10 Syracuse, 8:49 p.m.

Location – NRG Stadium

<u>Sunday, April 3:</u>

Fan Fest Events

Capital One JamFest (3 p.m. – 10 p.m.)

Location – Main Stage and Taste of Houston Stage

Fan Fest (12 p.m. – 8 p.m.)

Location – NRG Stadium/George R. Brown Convention Center

<u>Monday, April 4:</u>

Fan Fest Events

Tip-Off Tailgate (4:30 p.m. – 7:30 p.m.)

Fan Fest (12 p.m. – 7 p.m.)

Location – NRG Stadium/George R. Brown Convention Center

NCAA Basketball Game

No. 1 North Carolina vs. No. 2 Villanova

Location – NRG Stadium

2.2 End User Expansion and Training

Datacasting system developer SpectraRep provided end user training on Thursday, May 31 and Friday, April 1 at the City of Houston EOC and on an as-needed basis throughout the weekend. This training provided current and potential end users with the opportunity to understand the context and capabilities of the datacasting system, and to identify potential areas of use in their respective organizations.

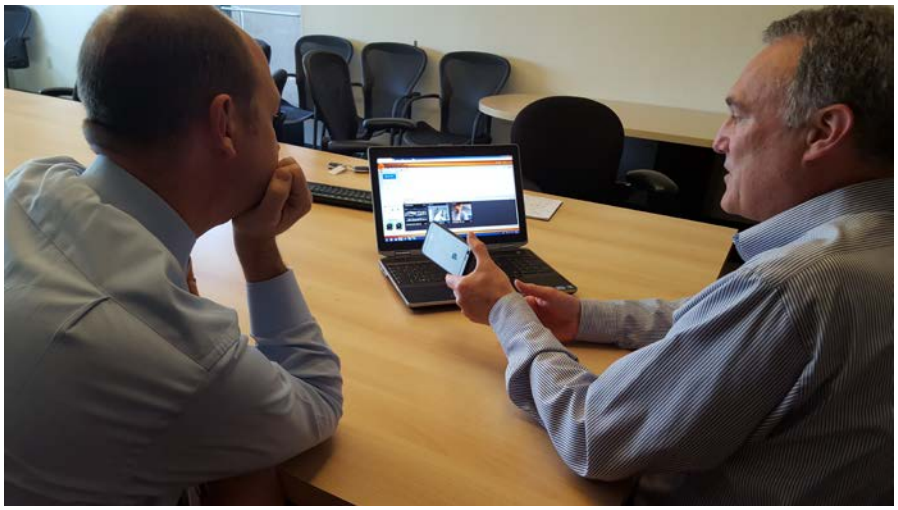

Figure 1: SpectraRep representative demonstrating datacasting cellular upload capability

In addition to end user training, datacasting hardware and software was provided to a number of new users across several agencies, including HFD, HPD, Harris County Sheriff, etc. While a limited number of these entities/users (e.g., permanent operations centers) needed the capability to control/"push" data, more entities were equipped with the ability to receive datacasting transmissions and to provide live cellular upload video footage (through the use of LTE bandwidth). A high-level identification of end users is in Table 1, below.

Figure 2: Datacasting capability being installed on HFD cellular phones to support the streaming of video data from the field

Table 1: Houston Datacasting End Users List

Department	# of End Users / Entities
City of Houston	4; including EOC
Harris County Sheriff Department	5; including 3 mobile command vehicles
Houston County Sheriff Department	2; including Joint Operations Center (JOC)
Houston Fire Department	10

Department	# of End Users / Entities
Houston Police Department	9; including Special Operations Command
NRG Stadium/Park	1
Texas Medical Center	4
University of Houston Police Department	3
Montgomery County Emergency Management	1

JHU/APL personnel were present during the training sessions. To be effective in real-world situations, the datacasting system must be installed, learned, and operated quickly and easily. A key objective of JHU/APL in attending these events was to assess whether end users were able to rapidly learn and operate the system.

2.3 Event EOC Support/Observations

The datacasting system provided video capabilities regularly during the NCAA event weekend to provide video capabilities to a number of end users from both the NRG stadium and surrounding/associated locations, including the free concerts and other Fan Fest events (see figures below). Periodic test uses of the cellular streaming capability were attempted with only one instance resulting in no video transmission availability. This was likely a result of high LTE traffic at the NRG stadium during game time.

No significant technical or operational issues occurred during the deployment activities. Several end-user comments and feedback were collected, which primarily focused on potential system improvements, including: SpectraRep dashboard enhancements to more easily identify and control user populations once multiple command centers begin "pushing data;" ability to segment or "stovepipe" datacasting operations when necessary; integration with future rapidly deployable camera capabilities (e.g., the Milestone network in place at NRG stadium); and other usability improvements. Many of these observations were captured in the test report from February's test events. Specifically, the report concluded

that while the SpectraRep system design is robust and expected to degrade gracefully if over-taxed, additional integration will be needed as the number of users increases.

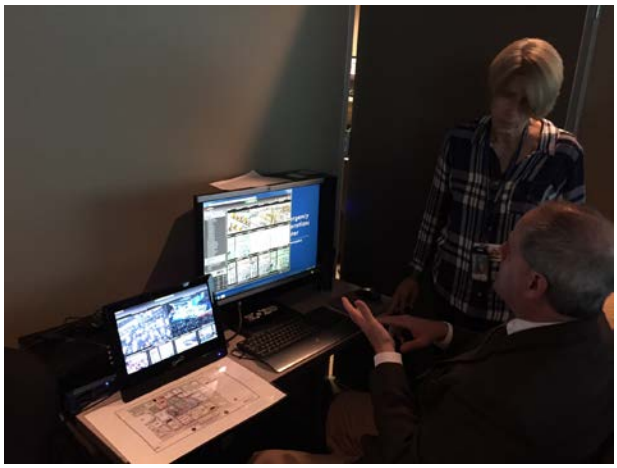

Figure 3: Datacasting Control Center Workstation in the City of Houston EOC

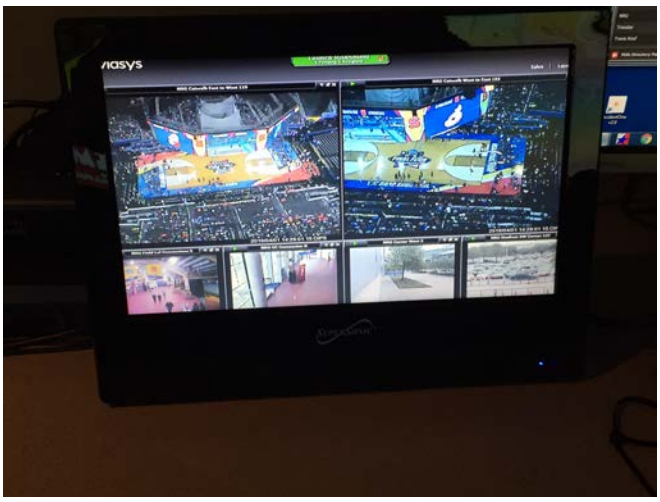

Figure 4: Supplemental Datacasting viewing monitor (also pictured above) in the City of Houston EOC

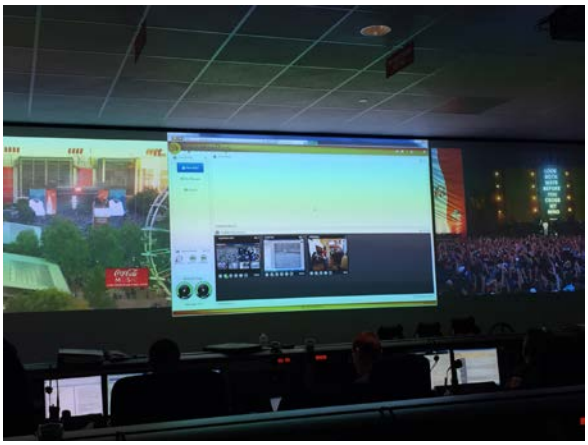

Figure 5: Datacasting dashboard as displayed on the City of Houston EOC situational awareness wall

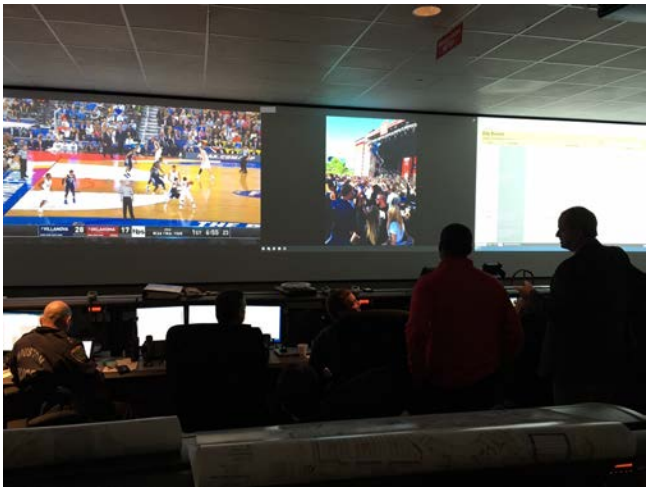

Figure 6: Datacasting dashboard as displayed on the City of Houston EOC situational awareness wall. Video from HPD cell phone displayed on monitor wall in Houston EOC before being rebroadcast via datacasting.

In addition to supporting the NCAA event deployment, a number of technical leadership meetings were conducted throughout the weekend, as described below. These meetings provided JHU/APL with an opportunity to collect feedback on the benefits and limitations of the datacasting system as currently configured in Houston. It also provided an opportunity to collect data regarding end user needs, both current and future. Key feedback included the following:

- The Houston Police Department Office of Public Safety (Chief Dennis Storemski) expressed a greater desire to leverage cellular phone video in locations where wired communications had been compromised.

- In a separate meeting with representatives of the City of Houston, HFD, VidSys (video system vendor) and the Unified Command at HPD headquarters, there was discussion regarding how to achieve more effective integration of rapidly deployable wireless cameras, associated networks and an ad hoc event operations command center (such as the one on-site at the NCAA Finals).

- There were discussions with the Texas Medical Center (TMC) Interim Director for Security Services (Dennis Hyams) about integration of datacasting into TMC operations. TMC is interested in using the datacasting system to move medical records and video when one-to-many delivery is more efficient and/or other communications networks fail.

- University of Houston (UH) Office of Emergency Management (OEM) proposed improvements to the existing datacasting dashboard. Currently, all users access the same dashboard through a single URL. UH OEM personnel hoped that providing each organization access to its own unique datacasting application would enable greater integration and faster video streaming. There was interest in developing a separate application to support student access via cell phone.

3 Proposed Enhancements

Houston public safety community end users participating in security for the event suggested a number of future enhancements. As of July 2016, the datacasting system has not been comprehensively integrated with the rest of the Houston/Harris County public safety infrastructure. Capabilities implemented to date have been developed on an ad hoc basis, with limited funding and limited time, in order to support tests and operational evaluation of the system. Given adequate funding and the opportunity to elicit requirements from end users, the system could readily be modified to provide more customized communication capabilities to the end user community.

Figure 7: HFD Observing Datacasting System

Recommended enhancements included the following:

(1) Automated targeting – It was suggested that the system could be configured to perform automatic targeting of recipients. Currently, recipients for each message must be selected on a message-by-message basis. End users indicated a desire for enhanced targeting capabilities, including the ability to automatically target specific users, groups of users or users within a specified geographic area. Geo-location would require access to the phone's Global Positioning Systems (GPS).

(2) Access to more video sources – End users expressed an interest in seeing the demonstrated capability to disseminate video from a registered cell phone expanded to include portable cameras, dashboard cameras in vehicles and screen captures from the Digital Sandbox system.

(3) Priority Messages – Participants requested more sophisticated priority services. Currently, priorities are set manually and assigned to a source. This existing capability was implemented to execute tests; it can be expanded to accommodate user preferences.

(4) Acknowledgements – It was suggested that the system could be configured to provide receipt acknowledgement via an alternate communications route (e.g., LTE). Acknowledgements could be displayed.

(5) Geo-Locate camera location – Participants expressed an interest in having the system configured to provide the location of cameras providing input video.

(6) DVR Capability – Some participants expressed an interest in being able to record and replay data. Other participants preferred not to have a permanent record, but preferred the ability to buffer and replay data for the duration of the event.

(7) Display Manipulation – Participants expressed a desire for greater ability to manipulate the display of datacasting video on the receiving equipment; this included the ability to hide or move specific windows, and the ability to display multiple videos simultaneously.

(8) Additional Alerting – Participants expressed a desire for increased alerting to new video streams and to display crawl messages used to alert operators.

(9) Easier commanding– Participants, especially from the HFD, requested easier access to video streams (touch screens are challenging in fire gear). They also expressed an interest in alert/message templates.

The increased ability to disseminate video will likely necessitate investment in improved video analytics. There was also an interest in event logging (i.e., the ability to record who used the system and what it was used for). This capability would also greatly facilitate testing and evaluation of the system.

Figure 8: HFD Command Vehicle

4 Summary and Conclusions

Under the direction of the DHS S&T Directorate's First Responders Group Office of Interoperability and Compatibility, JHU/APL supported an expanded end-user deployment of the prototype datacasting system (installed at the City of Houston EOC) from March 31 through April 4, 2016. This event follows previous testing and deployment activities for the datacasting system in both 2015 and 2016, and served to further expand the system's operational use, while gaining additional feedback on desired capabilities.

The results of this datacasting special event deployment were consistent with results of previous deployments and are as follows:

(1) The datacasting system is capable of providing useful quality video over a wide area of Houston and Harris County.

(2) The datacasting system allowed public safety officials and responders to securely send and stream encrypted video and other files using a dedicated portion of digital broadcast television spectrum.

(3) Using the datacasting system, the public safety users were able to view live streaming footage from various security cameras and cellular devices stationed throughout the stadium and surrounding areas on their tablets and computers from their command posts and in the EOC.

(4) Currently, the participating organizations lack other means to transmit useful quality video data; the desire for video surpasses any other communications needs expressed by test participants and observers.

(5) Datacasting greatly increased situational awareness and the ability to monitor and respond to any potential safety issues, especially in areas where they have limited cameras and areas with no coverage at all.

(6) Representatives of the participating agencies were impressed with the ease of set up and use of the datacasting system.

This event facilitated additional receiver installations, user training, and a broad exposure to the capability among and deeper within multiple agencies in Houston. The team collected usability and operational improvement suggestions that will be incorporated into future versions to improve the user experience.

The equipment used in this deployment is still in Houston and remains operational. We were informed that the datacasting system has been used subsequent to the basketball tournament to improve situational awareness during multiple flooding events, as well as a triathlon in the neighboring Montgomery County. JHU/APL is hoping that the participating organizations will continue to make use of the equipment on a more routine basis so that they can collect additional data to measure and document its performance.

5 References

1. "Video Datacasting: Houston Pilot After Action Report" HSHQPM-15-X-00122 October 2015.

2. Department of Homeland Security, Office of Emergency Communications, "Emergency Communications Case Study: Emergency Communications During the Response to the Boston Marathon Bombing," August 2013. Available online at: http://www.dhs.gov/sites/default/files/publications/oec-case%20study-support%20for%20response%20to%20boston%20marathon%20bombing-2013.pdf (Accessed 3 September 2015).

3. DeMorat, D., "Federal Actions in Response to the August 23, 2011, Virginia Earthquake Report," Federal Emergency Management Agency, 5 December 2013. Available online at: https://www.hsdl.org/?view&did=747579 (Accessed 3 September 2015).

4. Miller, R., "Hurricane Katrina: Communications and Infrastructure Impacts," Chap. 5, in *Threats at Our Threshold: Homeland Defense and Homeland Security in the New Century*, B. B. Tussing (ed.), U.S. Army War College, undated. Available online at: http://csis.org/images/stories/HomelandSecurity/071022_ThreatsAtOurThreshold.pdf (Accessed 3 September 2015).

5. Kwasinski, Alexis. "Lessons from field damage assessments about communication networks power supply and infrastructure performance during natural disasters with a focus on Hurricane Sandy." *FCC Workshop on Network Resiliency 2013*. 2013. Available online at: http://users.ece.utexas.edu/~kwasinski/1569715143%20Kwasinski%20paper%20FCC-NR2013%20submitted.pdf (Accessed 3 September 2015).

6. Independent Panel Reviewing the Impact of Hurricane Katrina on Communications Networks, "Report and Recommendations to the Federal Communications Commission," June 12, 2006.

APPENDIX A: Datacasting Capabilities - Expanded

The TV broadcast industry recently completed a government-supported transition from analog to digital signal transmission. The digital broadcast signal is composed of time-division-multiplexing (TDM) or time-division-multiple-access (TDMA) slots, with each time slot containing an Internet Protocol (IP) packet that supports the use of IP networking technology at the entry and destination nodes (i.e., TV station and TV receiver). The signal is transmitted at a constant rate of approximately 19.39 Mbps. However, the TV signal does not consume the total bit rate. Null packets are transmitted to maintain the constant bit rate. Those null packets can be replaced with data content not intended for television viewing without degrading the received television signal.

Datacasting is a technique that takes advantage of the under-utilized bit rate to transmit various digital data types, including voice, video, pictures, messaging, streaming, files and documents. The data may be encrypted to provide privacy, registered to enable targeting and may include forward-error protection to enable a high quality of service. While the nature of datacasting is a one-way, wide-area broadcast to all receivers in the coverage area, datacasting allows the use of addressing to specific individuals, groups of individuals, or every receiver for receiving and processing data.

In the datacasting system, a multiplexer is used to integrate the various data types with the TV signal prior to transmission. The multiplexer input is typically provided via a data server that connects to various data sources (e.g., information repositories or databases, closed-circuit TV monitors, voice systems, and messaging systems). The server provides the ability to select the data source(s) for transmission over the air. At the receiver end, an antenna and an inexpensive dongle plugged into the Universal Serial Bus (USB) port enables any computer or laptop to receive the TV signal encoded data. Datacasting software installed on the computer extracts the datacasting information from the rest of the DTV signal and presents it in a form understandable by the end user.

As with other secure wireless capabilities, transmissions via datacasting are secured via encryption and access control. Datacasting is amenable to a number of encryption and access control implementations. Compliance with Health Insurance Portability and Accountability Act (HIPAA) or other guidelines is achieved via encryption and access control, but was not explicitly addressed in this exercise or in this report.

For this DHS project, the Johns Hopkins University Applied Physics Laboratory (JHU/APL) is leveraging knowledge gained under an existing task with the Department of Justice (DOJ) to explore the technical aspects and value of datacasting as a mechanism to distribute video to multiple users via the public television broadcast spectrum. This includes knowledge gained from a baseline evaluation of the operational use of datacasting in the Clark County (Nevada) school system mentioned above. The goal for the DHS task is to develop a baseline understanding of the datacasting technology from the participants who have had the longest standing installation, including understanding the technology installation, the end user perspective on usage and the concept of operations under which it is utilized.

The first pilot of the Datacasting project sponsored by DHS was with the City of Houston, the Harris County Sheriff's Office, Texas Medical Center, NRG Park, University of Houston and KUHT TV (the local public television station). JHU/APL conducted testing and evaluation of their datacasting system, including documenting the technical installation, gathering end user comments on the use/usefulness of the system, gathering system performance measures (to the extent available) and other success factors. Harris County, Texas, has deployed a NPSBN test bed. The Harris County Sheriff's Office, founded in 1837, is the largest sheriff's office in Texas and the third largest in the U.S. The Texas Medical Center opened in 1945 and is the world's largest medical complex. NRG Park is a 350-acre sports complex presenting a variety of sporting events and concerts. The University of Houston was founded in 1927 and enrolls more than 40,000 students in more than 300 undergraduate and graduate degree programs. A professor at the University of Houston, Dr. John Schwarzwalder, established the first public television station in the U.S. in 1953 on the campus of the University of Houston. Now known as Houston Public Media, this station broadcasts on KUHT TV (VHF digital channel 8).

Additional technical details of the datacasting process are provided in Appendix B.

APPENDIX B: Technical Details of Datacasting

Television stations transmit aggregate broadcast streams at a constant 19.39 Mbps data rate. Various programs are multiplexed into the aggregate stream. Often television content will not consume the full data rate, or content can be set to use less than the full data rate. When this is the case, null packets are used to fill the unused data rate (see Figure A1). In datacasting, the null packets are replaced with datacasting information that can be received and interpreted by registered recipients with the required equipment.

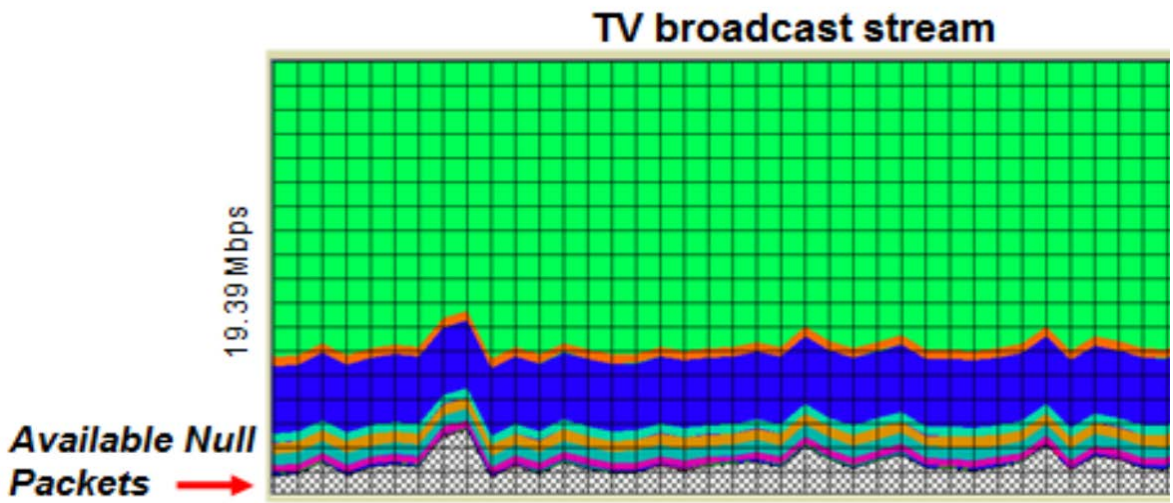

Figure A1. Digital TV Broadcast

There are three distinct aspects to the datacasting system: (1) information collection and processing; (2) transmission processing; and (3) reception processing (see Figure A2). Optionally, datacasting can be integrated into other systems to create a return path for two-way communication and services. In the prototype system implemented in Houston, information collection and processing, including decisions as to what information to send and to whom, were performed at the University of Houston Office of Emergency Management (OEM) Emergency Operations Center (OEC). Transmission was performed at Houston Public Media, Public Broadcast System (PBS) station KUHT. Reception equipment was implemented in laptops belonging to the various public safety agencies participating in the demonstration.

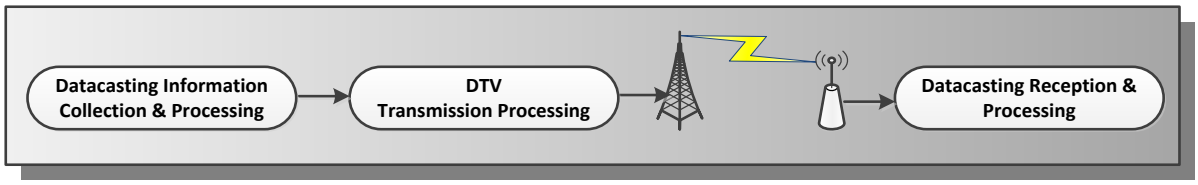

Figure A2. Components of a Datacasting System

Similar to satellite television providers (such as DirecTV), more than one TV program may be included (i.e., "multiplexed") into one digital television transport stream. Datacasting is an additional program stream in that broadcast channel, but it is not referenced in the Program and System Information Protocol (PSIP), so it does not appear as a "channel" to television sets.

Transport streams are based upon Moving Pictures Experts Group (MPEG)-2 standards. Datacasting information could be embedded within the DTV signal, as represented in Figure A3. In the figure, each packet of the broadcast stream, including the datacasting packet, consists of a 4-byte header and 184 bytes of information.

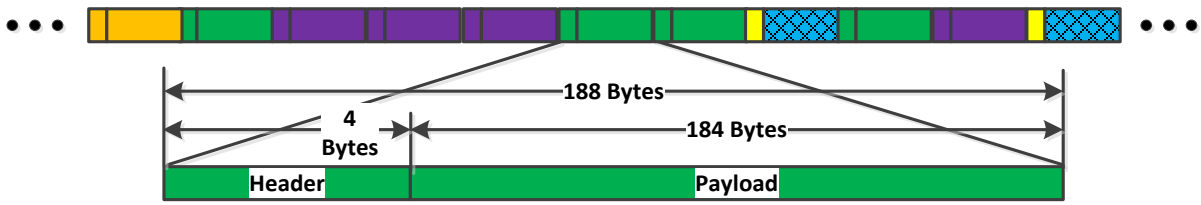

Figure A3. Datacasting within a DTV Stream

The header consists of 32 bits, including a 13-bit Packet Identifier (PID) as shown in Figure A4.

Sync	Error Indicator	Payload Unit Start Indicator	Transport Priority	PID	Transport Scrambling Control	Adaptation Field Control	Continuity Counter
8 Bits	1 Bit	1 Bit	1 Bit	13 Bits	2 Bits	2 Bits	4 Bits

Figure A4. DTV Broadcast Stream Header Format

Figure A5 illustrates the DTV transport components. The transport consists of services (i.e., television channels), which are made up of events (i.e., television programs) that each have their own elementary service streams (i.e., packetized MPEG 2 streams consisting of video, audio, metadata and service information.

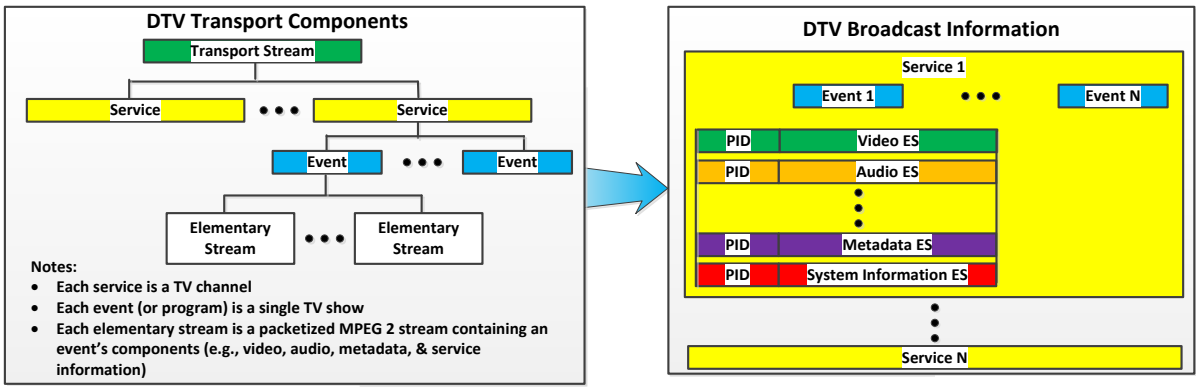

Figure A5. DTV Transport Components

The elementary service System Information contains various tables, including:

- Program Association;
- Program Map;
- Network Information;
- Service Description;
- Event Information;
- Conditional Access;
- Bouquet Association;
- Time and Date; and
- Time Offset.

System Information tables include PID assignments to elementary streams, events and services. System Information packets are assigned pre-determined Packet Identifiers (PIDs).

Figure A6 contains a representation of the Datacasting Transport information, which is different than that of the regular television transport. Datacasting does not use the System Information tables and PIDs are pre-assigned to datacasting. PIDs are not included in the System Information tables to prevent DTV receivers from searching for a "ghost" service, event or elementary stream. Datacasting uses "Access Control" to identify PID Assignments, Receiver Assignments, Receiver Group Assignments, Protocol Assignments (e.g., video, file and messaging assigned to individual and/or group receivers) and key list assignments (for encryption/decryption). Access Control is transmitted on a regular periodic interval.

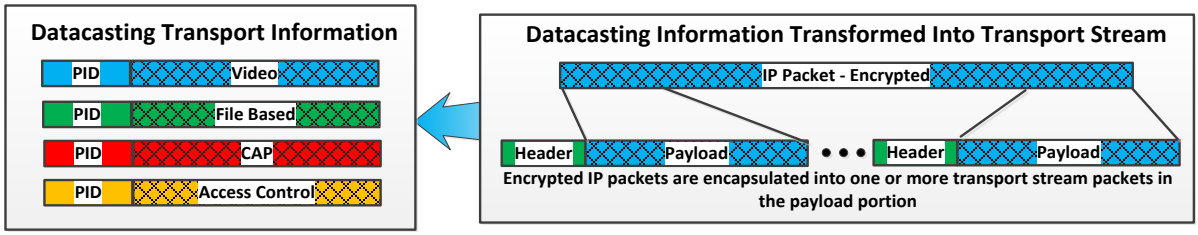

Figure A6. Datacasting Transport Stream

Datacasting Information Collection and Processing

In general, the datacasting system is configured to incorporate four types of data into the datacasting transport stream, as shown in Figure A7:

Real-Time Streamed Data (blue in Figures A6 & A7): Typically, the streamed data may consist of video information, such as from a Closed-Circuit Television (CCTV) system. Other streamed data, such as audio, weather information and news broadcasts, can also be incorporated.

File-Based Information (green in Figures A6 & A7): This information includes documents, images, and audio and video clips. It can include other types of digital information, including software. Forward error correction (FEC) and carouselling are used to assure all packets are received, even in degraded reception environments.

Message Based Information (red in Figures A6 & A7): Generally, the messages are Common Alerting Protocol (CAP) compliant messaging, allowing messages and notifications to be processed by any CAP compliant alerting platform.

Access Control Information (yellow in Figures A6 & A7): File-based data is used to control registration and access. This information includes receiver registration, receiver group assignments, protocol assignments, key list assignments and PID assignments.

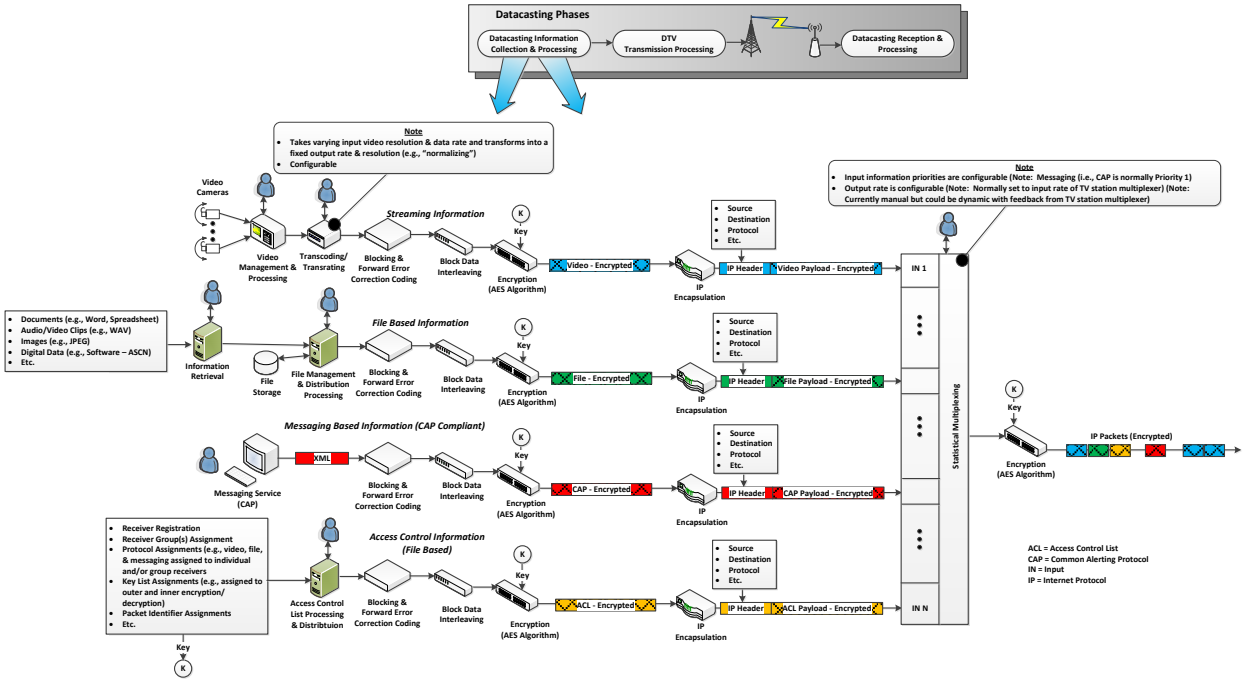

Figure A7. Datacasting Information Collection and Processing

Some portions of the data preparation process are common for all information types. Data are blocked and forward-error correction[1] is applied. The block data are interleaved and encrypted. Encrypted data are encapsulated using IP encapsulation into the MPEG transport packets. Source, destination and protocol data are packaged into the header. The datacasting packets are multiplexed to form a stream that is further encrypted using AES-256.

Transmission Processing

Transmission processing (see Figure A8) consists of merging (multiplexing) the datacasting data stream with the television programming stream(s), as depicted in Figure A9. Prior to the merging, the datacasting stream is processed into DTV transport packets and each transport packet is assigned a PID.

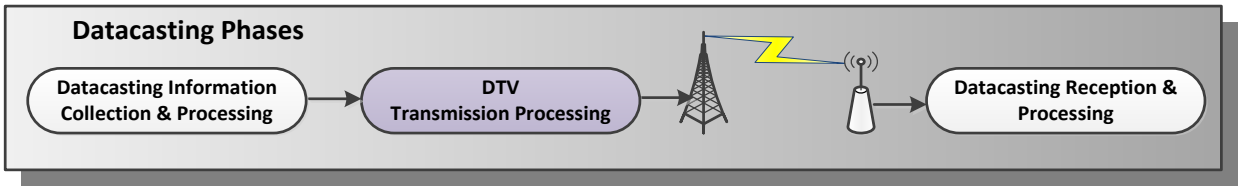

Figure A8. Transmission Processing

[1] Forward Error Correction is an encoding technique that protects the transmission and reception integrity of the data. It is used to detect and correct "bit-errors," technical problems that cause an occasional bit in a data stream to be misinterpreted. Provided the rate of errors in a data stream remains below a threshold, the Forward Error Correction Code can correct errors in the data stream. Forward Error Correction is a ubiquitous technique; it has no encryption value.

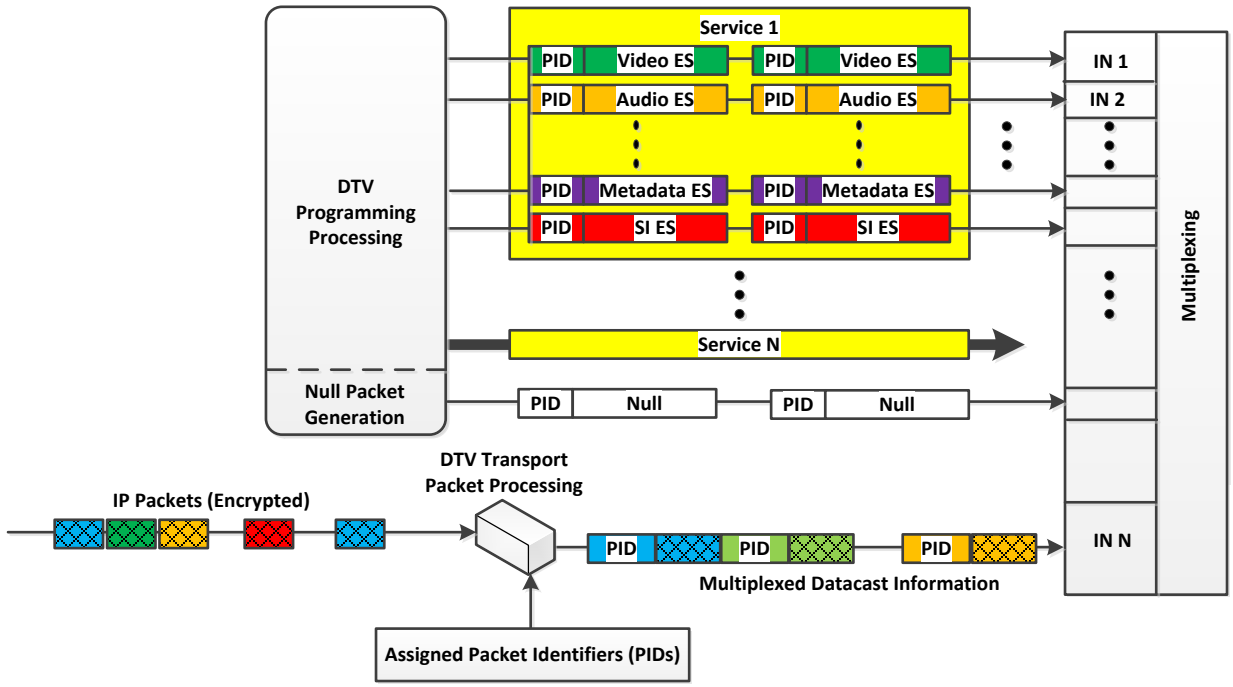

Figure A9. Multiplexing Datacasting and Television Streams

The overall output rate of the resulting merged stream (including datacasting and programming information) is 19.39 Mbps. Bit rate allocations are configurable. However, under normal conditions, there will be approximately 1-2 Mbps available for datacasting. This bit rate can be increased should conditions warrant it. Maximum bit rate is currently set manually. In the future, it may be possible to enter the information electronically into the information collection statistical multiplexor, which would enable the system to dynamically re-allocate the bit rate.

Null packets are required to maintain a constant 19.39 Mbps bit rate.

Figure A10 depicts the functions performed on the multiplexed signal through transmission. The signal is modulated using 8 level vestigial sideband modulation (8-VSB) and transmitted.

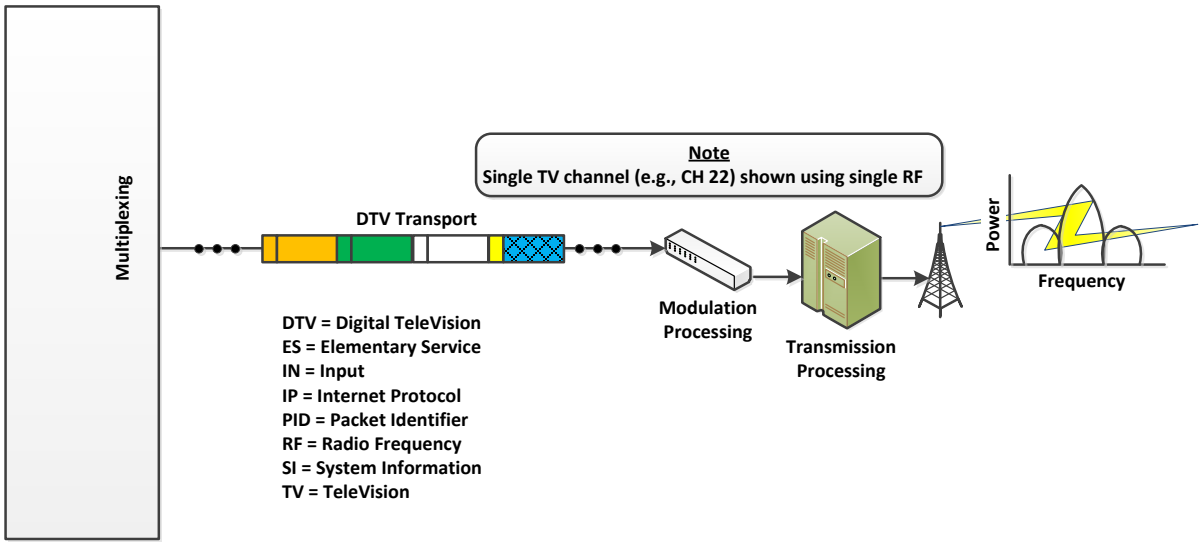

Figure A10. Transmission of Multiplexed Data

Datacasting Reception and Processing

Datacasting reception (see Figure A11) begins with reception of the signal by a receiver connected to a computing device, not a television set. The receiver can be a USB "dongle" or Linux based appliance. Any UHF or VHF antenna will capture the signal. However, only devices with the required software, decryption and registration will actually be able to convert the signal into useful information. Upon receipt of a signal, the datacasting system demodulates the signal and identifies the packets directed to the device according to the assigned PIDs. A device can be designated as the unique registered recipient or as part of a group registration.

When a device is authorized to receive data, the encrypted IP packets are decrypted for processing by the appropriate application software in the device. Figure A12 depicts the process.

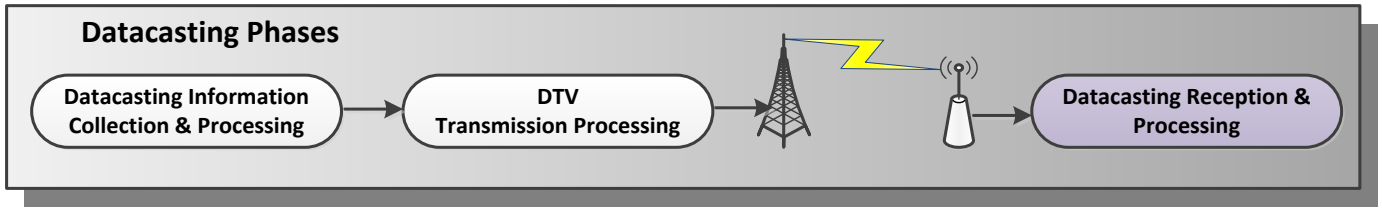

Figure A11. Datacasting Reception and Processing

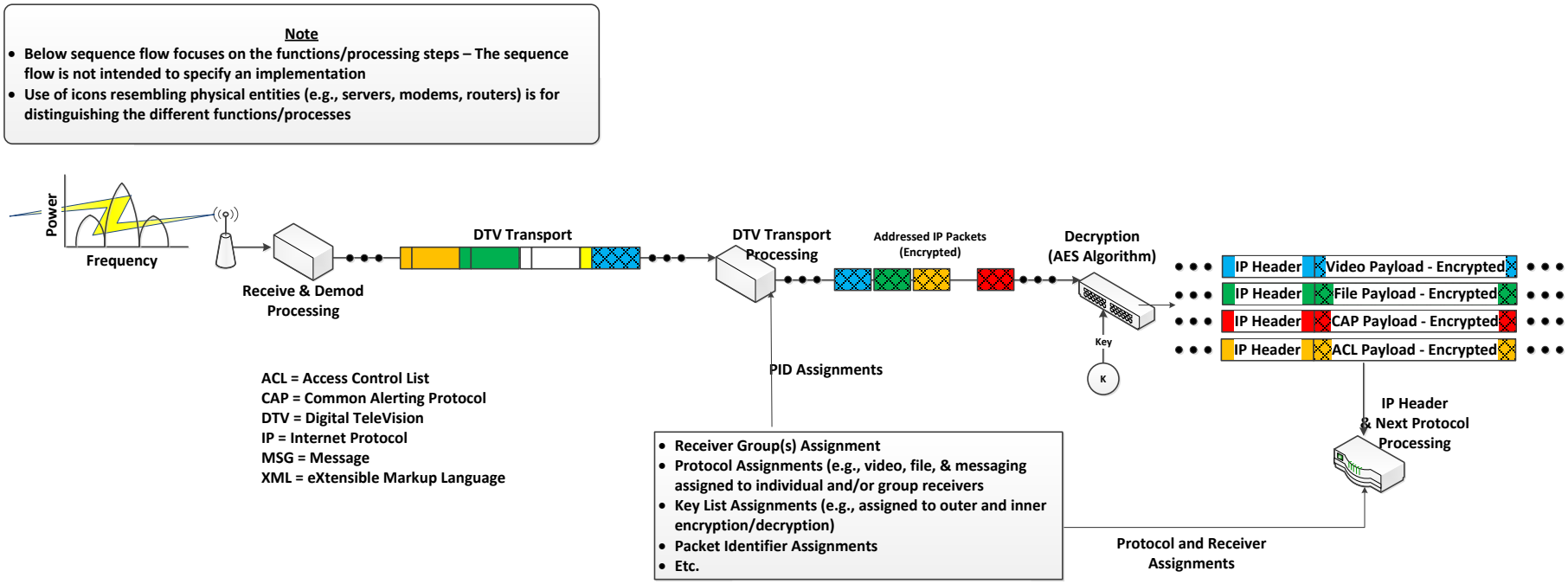

Figure A12. Datacasting Receipt

Finally, IP packets are processed according to type (streamed data, files, messages and access control) as shown in Figure A13. The further processing of data type is contingent on the access control list that identifies the encryption keys and receiver assignments for each data type processed by this receiver.

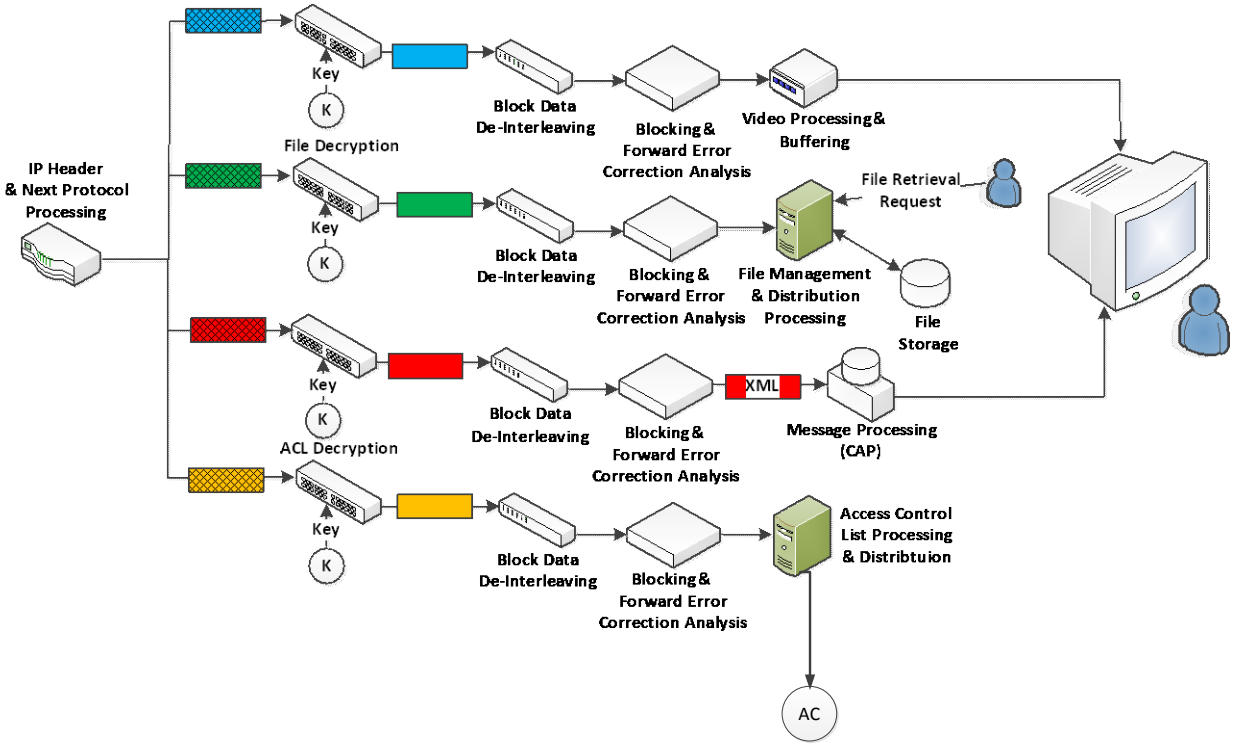

Figure A13. Processing Received Datacasting Information