# Office of Legislative Affairs

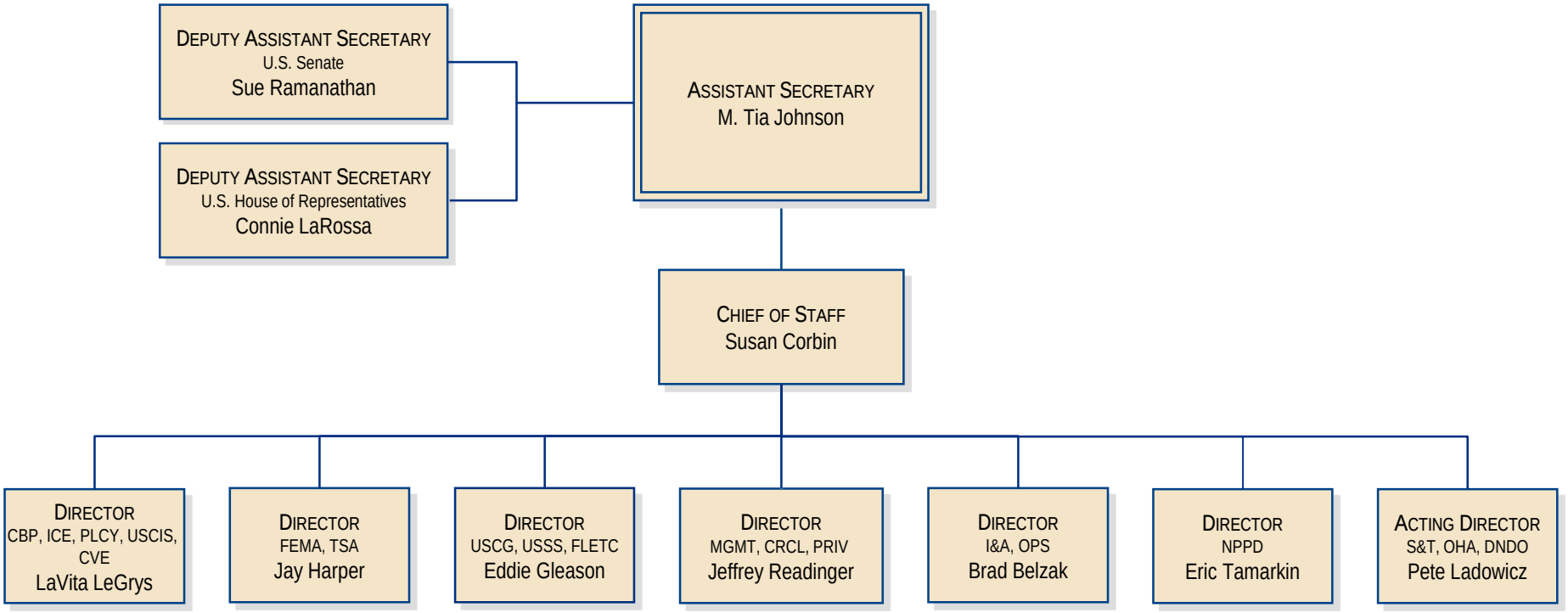


Homeland Security

Last updated
23 May 2016