Office of Legislative Affairs

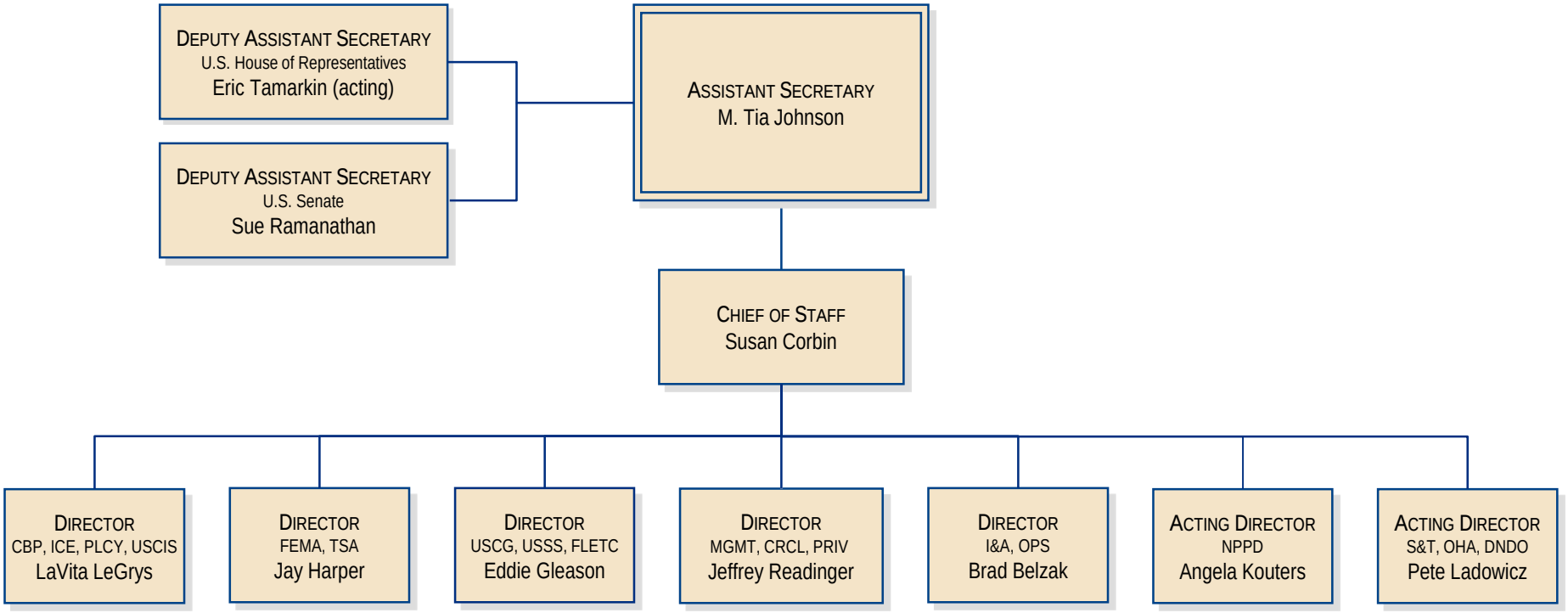

Homeland Security

Last updated
19 Apr 2016